PART No. CWST1036NK

for more information visit

www.hammfg.com

Data subject to change without notice

Isometric drawing Not to Scale

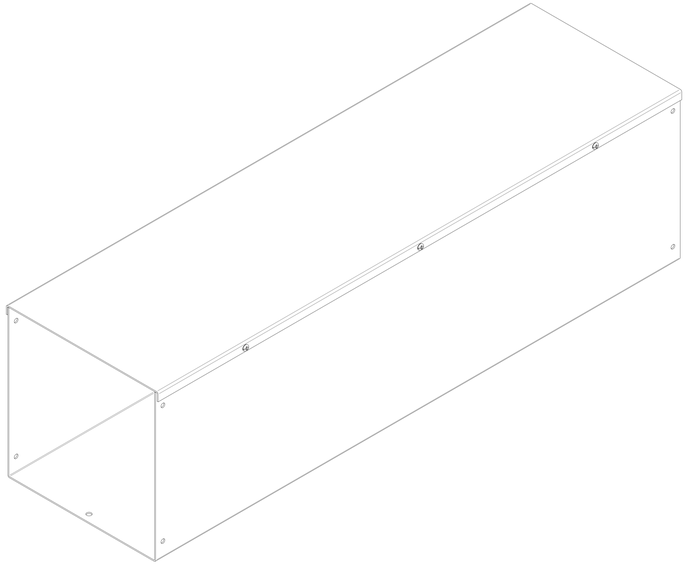

ISOMETRIC VIEW

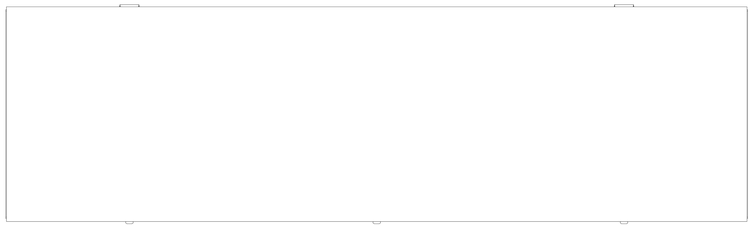

TOP VIEW

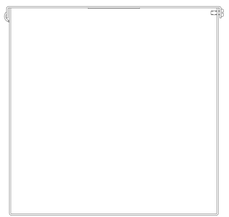

SIDE VIEW

FRONT VIEW

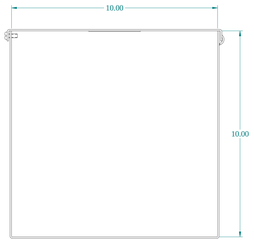

SIDE VIEW

BACK VIEW

BOTTOM VIEW